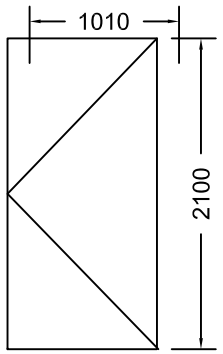

DT-01 - Timber Door/Steel Frame

Sound Reduction - 35db
Fire Rating - 30min
Security - Lockable
Threshold - A
Quantity - 0
Radiation proof Code 4 1.8mm
lead shielding equivalence
Radiation proof symbol

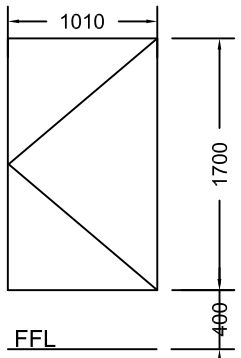

DT-02- Timber Door (EL-Room)

Sound Reduction - /
Fire Rating - 30min
Security - Lockable
Threshold - Equal as frame
Quantity - 0

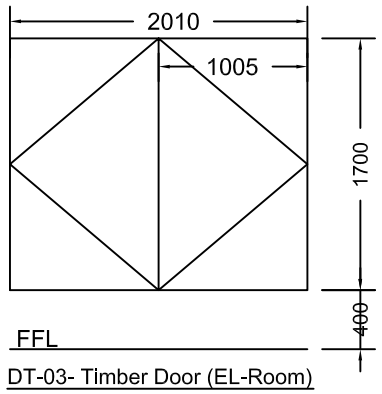

DT-03- Timber Door (EL-Room)

Sound Reduction - /
Fire Rating - 30min
Security - Lockable
Threshold - Equal as frame
Quantity - 0

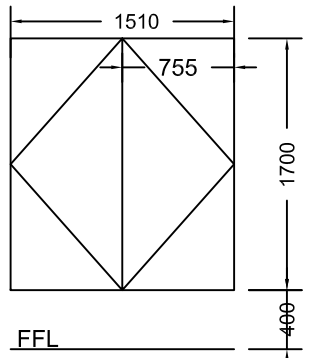

DT-04- Timber Door (EL-Room)

Sound Reduction - /
Fire Rating - 30min
Security - Lockable
Threshold - Equal as frame
Quantity - 0

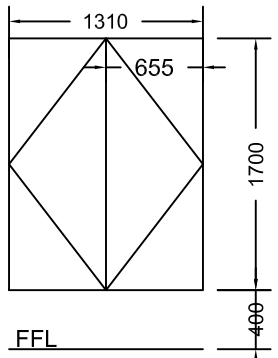

DT-05 - Timber Door (EL-Room)

Sound Reduction - /
Fire Rating - 30min
Security - Lockable
Threshold - Equal as frame
Quantity - 0

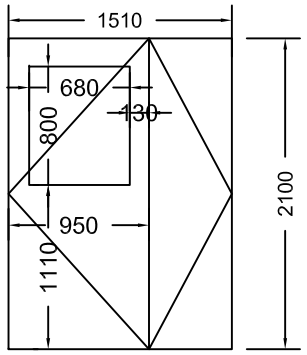

DT-06 - Timber Door/Steel Frame

Sound Reduction - 35db
Fire Rating - /
Security - /
Threshold - A
Quantity - 0
Patient Trolley Access

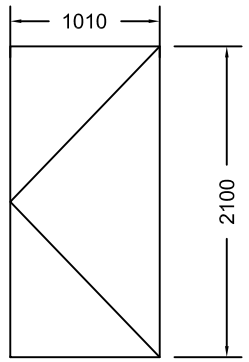

DT-07 - Timber Door/Steel frame

Sound Reduction - 48db
Fire Rating - /
Security - Thumb Turn Lock
Threshold - A
Quantity - 0
Wheelchair Access
Occupancy indicator
Outside emergency release

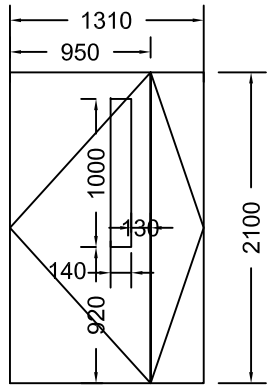

DT-08 - Timber Door/Steel Frame

Sound Reduction - 35db
Fire Rating - /
Security - Keylock & Thumb Turn
Threshold - A
Quantity - 0
Patient Trolley Access

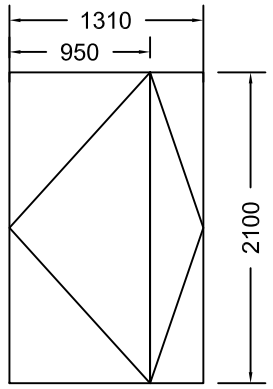

DT-09 - Timber Door/Steel Frame

Sound Reduction - 35db
Fire Rating - /
Security - Keylock & Thumb Turn
Threshold - A
Quantity - 0
Patient Trolley Access

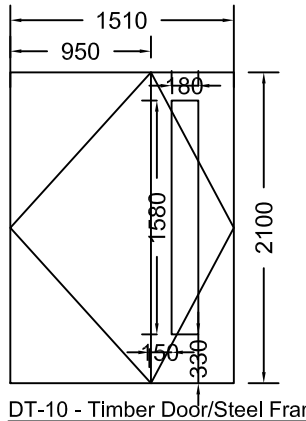

DT-10 - Timber Door/Steel Frame

Sound Reduction - 48db
Fire Rating - /
Security - /
Threshold - A
Quantity - 0
Door Hinge Protection
Bed Access

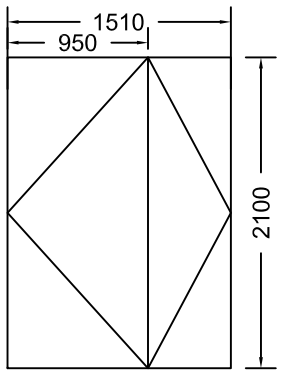

DT-11 - Timber Door/Steel Frame

Sound Reduction - 35db
Fire Rating - /
Security - Keylock & Thumb Turn
Threshold - A
Quantity - 0
Bed Access

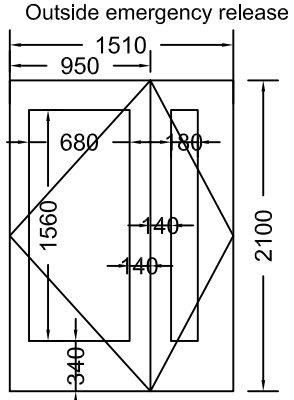

DT-12 - Timber Door/Steel Frame

Sound Reduction - 35db
Fire Rating - 30min
Security - /
Threshold - A
Quantity - 0
Trolley Access
180 degree swing
Door Detents
Self closing delayed action (Free Swing Closing Device)

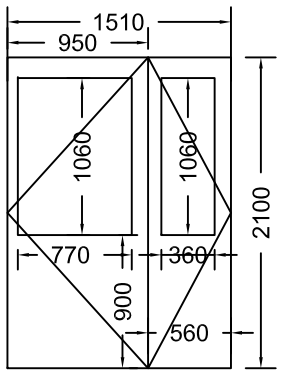

DT-13 - Timber Door/Steel Frame

Sound Reduction - 48db
Fire Rating - /
Security - Keylock / Lockable
Threshold - A
Quantity - 0
Bed Access
Obscurable / Blinds in between glazing
Self Closing (with detentes)

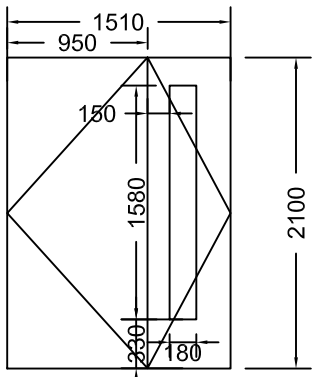

DT-14 - Timber Door/Steel Frame

Sound Reduction - 35db
Fire Rating - /
Security - /
Threshold - A
Quantity - 0
Patient Trolley Access
Door closing device with catch hook

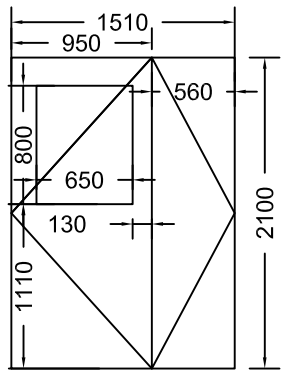

DT-15 - Timber Door/Steel Frame

Sound Reduction - 48db
Fire Rating - /
Security - Keylock/Thumb Turn
Threshold - A
Quantity - 0
Patient Trolley Access

2m 0 2 4 6 8 10m

NOTES

- All dimensions to be confirmed on site. Those on drawings are only indicative in case of any doubt consult with the Architect.
- All doors include door leaf and door frame.
- Door swing to be determined from Architectural Plans
- All timber doors should have :
  1. A decorative laminated plastic surface coating according to BS4965 and BS-EN438:1(HG)
  2. An untreated surface finish.
  3. Colour - RAL5030-B10G
- Door leaf edge to consist of :
  1. Hardwood lipping. The joint with the veneer is to be flush.
  2. Material - Solid Oak.
  3. Surface finish - clear lacquered factory finish as per specification
- Refer to Architectural plans for wall thickness
- Door Frame details :
  1. Type and Material - Adjustable frame of steel to be included on both sides
  2. No edge protection
  3. Surface coating - steel plate
  4. Surface finishing - colour painted factory finish as per specifications
  5. Colour - RAL0502-Y
- Threshold Type - (A) Flexible weather strip and rounded threshold of rubber , Material - Rubber resilience
- All doors include architraves with same specifications as respective frames
- Colour coding for laminated doors with steel frame
  - Door leaf - NCS S 5030-B10G
  - Door frame - NCS S 0502-Y
- Colour coding for internal doors to electrical cupboards
  - Door leaf - NCS S 0502-Y
  - Door frame - NCS S 0502-Y
- Colour coding for internal glazed wooden partitions
  - NCS S 0502-Y or RAL equivalent,Gloss 60,glazing beads of oak - refer to specs Sec. 08550V
- ALL DOORS TO HAVE FREE OPENING AREA OF MIN. 900MM

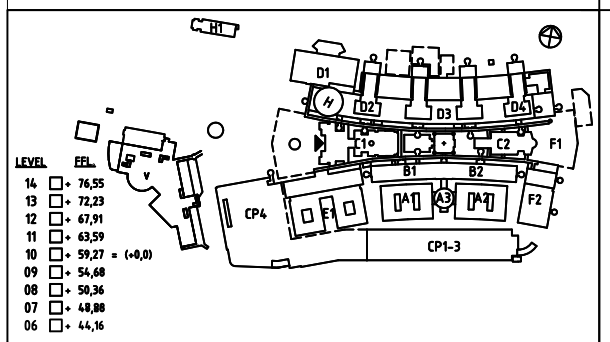

REV.	NO.	DESCRIPTION	BY	DATE

STATUS
FOR CONSTRUCTION 27 FEB 2013

MATER DEI HOSPITAL
ONCOLOGY CENTRE

FMS Foundation for Medical Services

DOOR & WINDOW SCHEDULE
Internal Timber Door Details

PERFORMED BY	SCALE A1	APPROVED BY	DWG NO	REV
CGE	1:25	JC	BVP_AD(HI)-VX 001	
DESIGN/CHECKED	SCALE A3	DATE		
NM	1:50	27 FEB 2013		